Please check the examination details below before entering your candidate information

Candidate surname	Other names

Pearson Edexcel International Advanced Level

Centre Number | Candidate Number

Sample Assessment Materials for first teaching September 2018

(Time: 1 hour 30 minutes) | Paper Reference **WME02/01**

Mathematics

International Advanced Subsidiary/Advanced Level
Mechanics M2

You must have:
Mathematical Formulae and Statistical Tables, calculator

Total Marks

Candidates may use any calculator permitted by Pearson regulations. Calculators must not have the facility for symbolic algebra manipulation, differentiation and integration, or have retrievable mathematical formulae stored in them.

Instructions

- Use **black** ink or ball-point pen.
- If pencil is used for diagrams/sketches/graphs it must be dark (HB or B).
- **Fill in the boxes** at the top of this page with your name, centre number and candidate number.
- Answer **all** questions and ensure that your answers to parts of questions are clearly labelled.
- Answer the questions in the spaces provided – *there may be more space than you need.*
- You should show sufficient working to make your methods clear. Answers without working may not gain full credit.
- Inexact answers should be given to three significant figures unless otherwise stated.

Information

- A booklet 'Mathematical Formulae and Statistical Tables' is provided.
- There are 7 questions in this question paper. The total mark for this paper is 75.
- The marks for **each** question are shown in brackets – *use this as a guide as to how much time to spend on each question.*

Advice

- Read each question carefully before you start to answer it.
- Try to answer every question.
- Check your answers if you have time at the end.
- If you change your mind about an answer, cross it out and put your new answer and any working underneath.

Turn over ▶

S59764A

©2018 Pearson Education Ltd.

1/1/1/1/1/1/

S 5 9 7 6 4 A 0 1 2 8

Pearson

Leave blank

Answer ALL questions. Write your answers in the spaces provided.

Unless otherwise indicated, whenever a numerical value of g is required, take $g = 9.8\,\text{m s}^{-2}$ and give your answer to either 2 significant figures or 3 significant figures.

1. A car of mass 900 kg is travelling up a straight road inclined at an angle θ to the horizontal, where $\sin\theta = \frac{1}{25}$. The car is travelling at a constant speed of $14\,\text{m s}^{-1}$ and the resistance to motion from non-gravitational forces has a constant magnitude of 800 N. The car takes 10 seconds to travel from A to B, where A and B are two points on the road.

(a) Find the work done by the engine of the car as the car travels from A to B.

(4)

When the car is at B and travelling at a speed of $14\,\text{m s}^{-1}$ the rate of working of the engine of the car is suddenly increased to P kW, resulting in an initial acceleration of the car of $0.7\,\text{m s}^{-2}$. The resistance to motion from non-gravitational forces still has a constant magnitude of 800 N.

(b) Find the value of P.

(4)

DO NOT WRITE IN THIS AREA DO NOT WRITE IN THIS AREA DO NOT WRITE IN THIS AREA

Leave blank

Question 1 continued

DO NOT WRITE IN THIS AREA

DO NOT WRITE IN THIS AREA

DO NOT WRITE IN THIS AREA

Leave blank

Question 1 continued

DO NOT WRITE IN THIS AREA

DO NOT WRITE IN THIS AREA

DO NOT WRITE IN THIS AREA

Leave blank

Question 1 continued

Q1

(Total for Question 1 is 8 marks)

DO NOT WRITE IN THIS AREA
DO NOT WRITE IN THIS AREA
DO NOT WRITE IN THIS AREA

Leave blank

2. A particle P of mass 0.7 kg is moving in a straight line on a smooth horizontal surface. The particle P collides with a particle Q of mass 1.2 kg which is at rest on the surface. Immediately before the collision the speed of P is $6\,\text{m}\,\text{s}^{-1}$. Immediately after the collision both particles are moving in the same direction. The coefficient of restitution between the particles is e.

(a) Show that $e < \frac{7}{12}$

(7)

Given that $e = \frac{1}{4}$

(b) find the magnitude of the impulse exerted on Q in the collision.

(3)

DO NOT WRITE IN THIS AREA
DO NOT WRITE IN THIS AREA
DO NOT WRITE IN THIS AREA

Leave blank

Question 2 continued

DO NOT WRITE IN THIS AREA

DO NOT WRITE IN THIS AREA

DO NOT WRITE IN THIS AREA

Leave blank

Question 2 continued

DO NOT WRITE IN THIS AREA

DO NOT WRITE IN THIS AREA

DO NOT WRITE IN THIS AREA

Leave blank

Question 2 continued

(Total for Question 2 is 10 marks)

Q2

DO NOT WRITE IN THIS AREA

DO NOT WRITE IN THIS AREA

DO NOT WRITE IN THIS AREA

Leave blank

3. At time t seconds ($t \geqslant 0$) a particle P has velocity $\mathbf{v}\,\mathrm{m\,s^{-1}}$, where

$$\mathbf{v} = (6t^2 + 6t)\mathbf{i} + (3t^2 + 24)\mathbf{j}$$

When $t = 0$ the particle P is at the origin O. At time T seconds, P is at the point A and $\mathbf{v} = \lambda(\mathbf{i} + \mathbf{j})$, where λ is a constant.

Find

(a) the value of T,

(3)

(b) the acceleration of P as it passes through the point A,

(3)

(c) the distance OA.

(5)

DO NOT WRITE IN THIS AREA DO NOT WRITE IN THIS AREA DO NOT WRITE IN THIS AREA

Leave blank

Question 3 continued

(Total for Question 3 is 11 marks)

Q3

DO NOT WRITE IN THIS AREA

DO NOT WRITE IN THIS AREA

DO NOT WRITE IN THIS AREA

Leave blank

4.

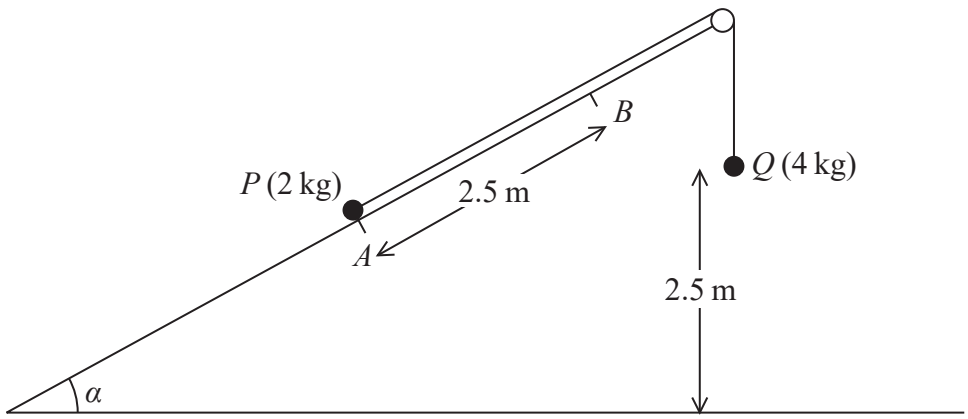

Figure 1

Two particles P and Q, of mass 2 kg and 4 kg respectively, are connected by a light inextensible string. Initially P is held at rest at the point A on a rough fixed plane inclined at α to the horizontal ground, where $\sin\alpha = \frac{3}{5}$. The string passes over a small smooth pulley fixed at the top of the plane. The particle Q hangs freely below the pulley and 2.5 m above the ground, as shown in Figure 1. The part of the string from P to the pulley lies along a line of greatest slope of the plane. The system is released from rest with the string taut. At the instant when Q hits the ground, P is at the point B on the plane. The coefficient of friction between P and the plane is $\frac{1}{4}$.

(a) Find the work done against friction as P moves from A to B.

(4)

(b) Find the total potential energy lost by the system as P moves from A to B.

(3)

(c) Find, using the work-energy principle, the speed of P as it passes through B.

(4)

DO NOT WRITE IN THIS AREA
DO NOT WRITE IN THIS AREA
DO NOT WRITE IN THIS AREA

Leave blank

Question 4 continued

DO NOT WRITE IN THIS AREA

DO NOT WRITE IN THIS AREA

DO NOT WRITE IN THIS AREA

Leave blank

Question 4 continued

DO NOT WRITE IN THIS AREA

DO NOT WRITE IN THIS AREA

DO NOT WRITE IN THIS AREA

Leave blank

Question 4 continued

(Total for Question 4 is 11 marks)

Q4

DO NOT WRITE IN THIS AREA

DO NOT WRITE IN THIS AREA

DO NOT WRITE IN THIS AREA

Leave blank

5.

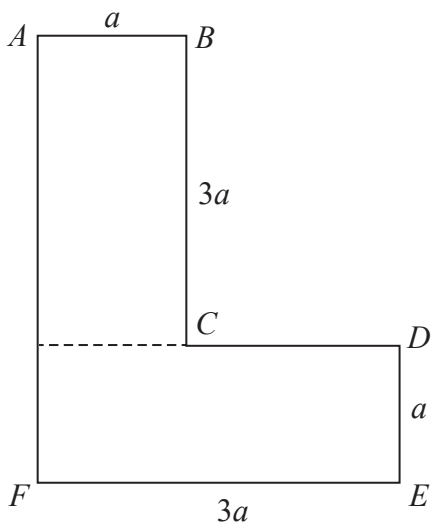

Figure 2

The uniform lamina $ABCDEF$, shown in Figure 2, consists of two identical rectangles with sides of length a and $3a$. The mass of the lamina is M. A particle of mass kM is attached to the lamina at E. The lamina, with the attached particle, is freely suspended from A and hangs in equilibrium with AF at an angle θ to the downward vertical.

Given that $\tan\theta = \frac{4}{7}$, find the value of k.

(10)

DO NOT WRITE IN THIS AREA
DO NOT WRITE IN THIS AREA
DO NOT WRITE IN THIS AREA

Leave blank

Question 5 continued

DO NOT WRITE IN THIS AREA

DO NOT WRITE IN THIS AREA

DO NOT WRITE IN THIS AREA

Leave blank

Question 5 continued

DO NOT WRITE IN THIS AREA

DO NOT WRITE IN THIS AREA

DO NOT WRITE IN THIS AREA

Leave blank

Question 5 continued

(Total for Question 5 is 10 marks)

Q5

DO NOT WRITE IN THIS AREA

DO NOT WRITE IN THIS AREA

DO NOT WRITE IN THIS AREA

Leave blank

6.

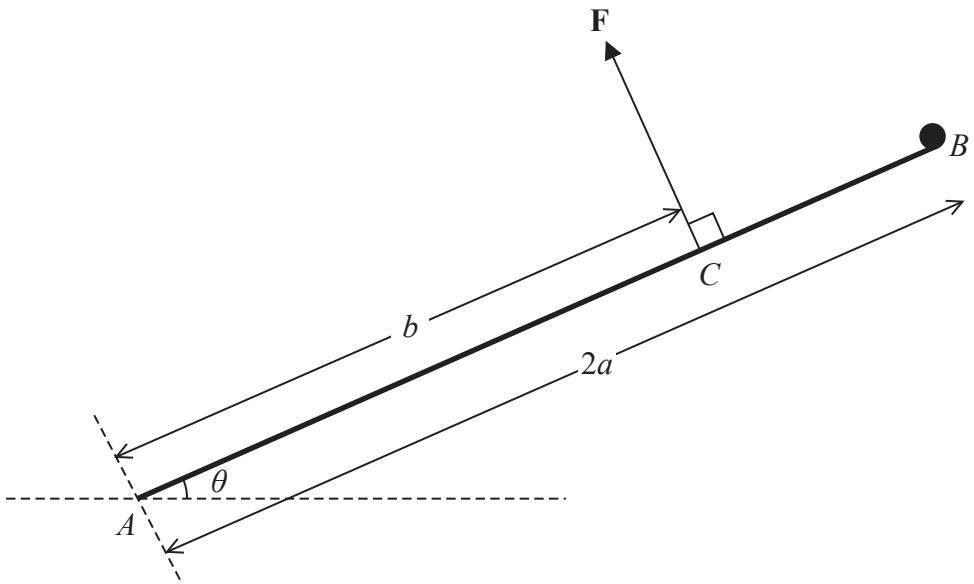

Figure 3

A uniform rod AB, of mass $3m$ and length $2a$, is freely hinged at A to a fixed point on horizontal ground. A particle of mass m is attached to the rod at the end B. The system is held in equilibrium by a force **F** acting at the point C, where $AC = b$. The rod makes an acute angle θ with the ground, as shown in Figure 3. The line of action of **F** is perpendicular to the rod and in the same vertical plane as the rod.

(a) Show that the magnitude of **F** is $\dfrac{5mga}{b}\cos\theta$

(4)

The force exerted on the rod by the hinge at A is **R**, which acts upwards at an angle ϕ above the horizontal, where $\phi > \theta$.

(b) Find

(i) the component of **R** parallel to the rod, in terms of m, g and θ,

(ii) the component of **R** perpendicular to the rod, in terms of a, b, m, g and θ.

(5)

(c) Hence, or otherwise, find the range of possible values of b, giving your answer in terms of a.

(2)

DO NOT WRITE IN THIS AREA
DO NOT WRITE IN THIS AREA
DO NOT WRITE IN THIS AREA

Pearson Edexcel International Advanced Subsidiary/Advanced Level in Mathematics, Further Mathematics and Pure Mathematics – Sample Assessment Materials (SAMs) – Issue 3 – June 2018 © Pearson Education Limited 2018

Leave blank

Question 6 continued

DO NOT WRITE IN THIS AREA

DO NOT WRITE IN THIS AREA

DO NOT WRITE IN THIS AREA

Leave blank

Question 6 continued

DO NOT WRITE IN THIS AREA

DO NOT WRITE IN THIS AREA

DO NOT WRITE IN THIS AREA

Leave blank

Question 6 continued

(Total for Question 6 is 11 marks)

Q6

DO NOT WRITE IN THIS AREA

DO NOT WRITE IN THIS AREA

DO NOT WRITE IN THIS AREA

Leave blank

7.

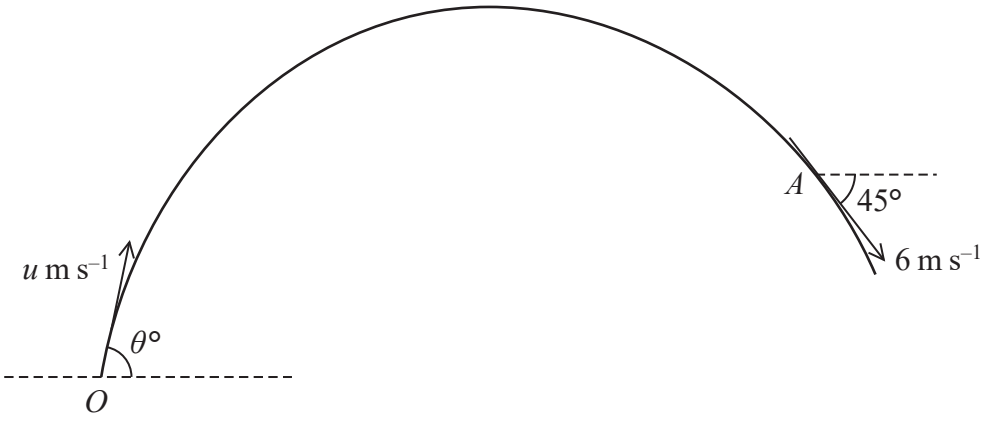

Figure 4

At time $t = 0$, a particle P of mass 0.7 kg is projected with speed u m s^{-1} from a fixed point O at an angle $\theta°$ to the horizontal. The particle moves freely under gravity. At time $t = 2$ seconds, P passes through the point A with speed 6 m s^{-1} and is moving downwards at 45° to the horizontal, as shown in Figure 4.

Find

(a) the value of θ,

(6)

(b) the kinetic energy of P as it reaches the highest point of its path.

(3)

For an interval of T seconds, the speed, v m s^{-1}, of P is such that $v \leqslant 6$

(c) Find the value of T.

(5)

DO NOT WRITE IN THIS AREA
DO NOT WRITE IN THIS AREA
DO NOT WRITE IN THIS AREA

Leave blank

Question 7 continued

DO NOT WRITE IN THIS AREA

DO NOT WRITE IN THIS AREA

DO NOT WRITE IN THIS AREA

Leave blank

Question 7 continued

DO NOT WRITE IN THIS AREA

DO NOT WRITE IN THIS AREA

DO NOT WRITE IN THIS AREA

Leave blank

Question 7 continued

DO NOT WRITE IN THIS AREA

DO NOT WRITE IN THIS AREA

DO NOT WRITE IN THIS AREA

Leave blank

Question 7 continued

Q7

(Total for Question 7 is 14 marks)

TOTAL FOR PAPER IS 75 MARKS

DO NOT WRITE IN THIS AREA

DO NOT WRITE IN THIS AREA

DO NOT WRITE IN THIS AREA